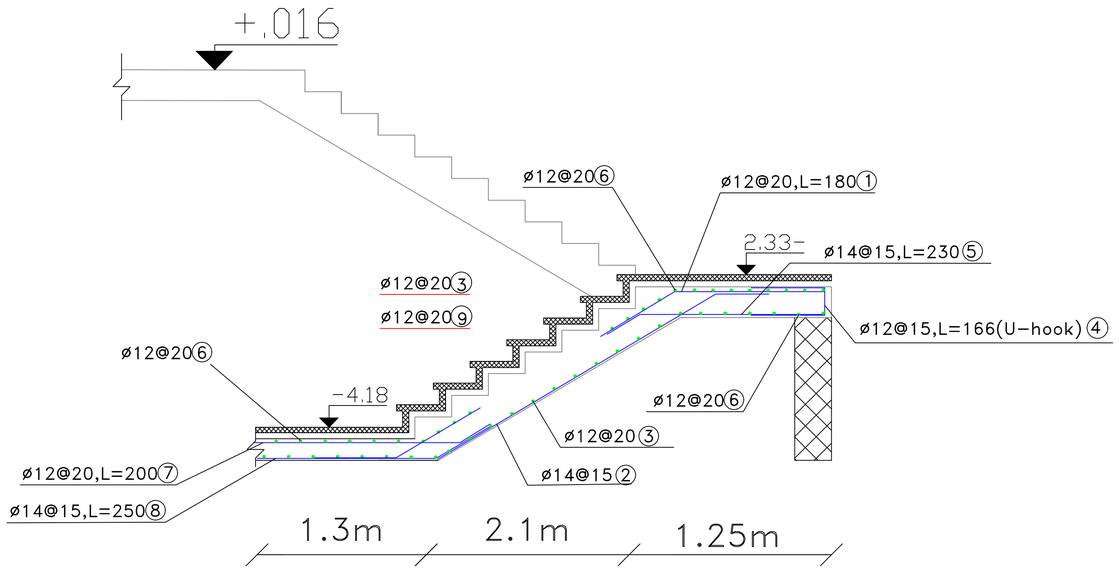

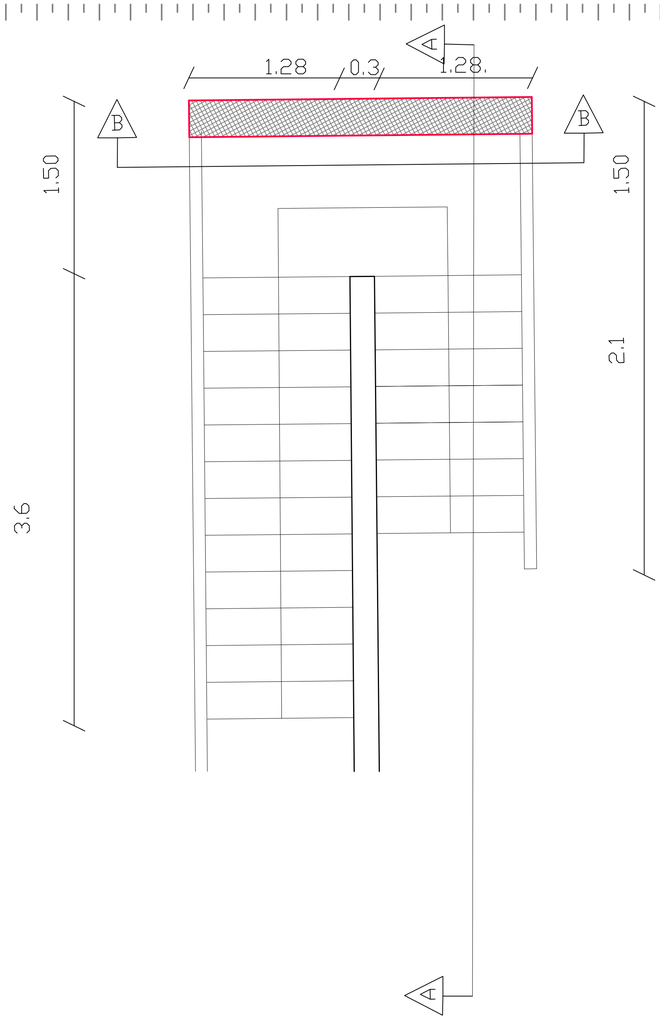

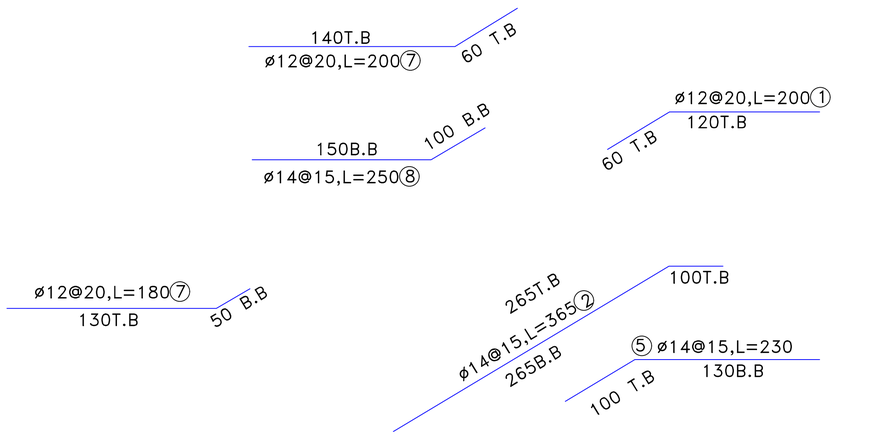

Section (A-A)

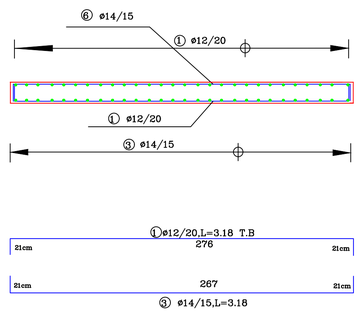

Section (B-B)

PALESTINE POLYTECHNIC UNIVERSITY

COLLEGE OF ENGINEERING

CIVIL & ARCH. ENG. DEPARTMENT

BUILDING ENGINEERING

Designed by:

Ihab Talahmeh

Hammada Hosheya

Mahmoud Mahariq

Supervisor:

Dr. Riyad Abdel-Karim Awad

Project:

Dura Woman's Centre

Drawing :

Stairs 2 Detalis

No.:

S 24

Scale:

1:25

Date:

29-4-2018